Automatic Door Systems

TH-3

Single-winged / Bi-parting

http ://www.kthtw.com
e-mail : kth@kthtw.com

OPERATION INSTRUCTION

Our company has the following series of automatic door, please contact with our distributors/representations.

Round type door

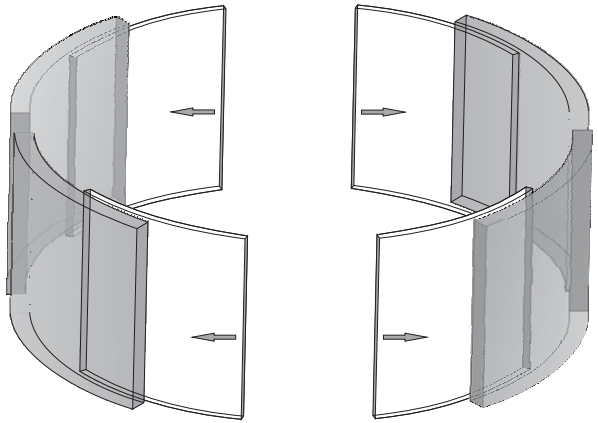

Installation: Please in accordance with the instruction of Round Type Door.

Curved type door

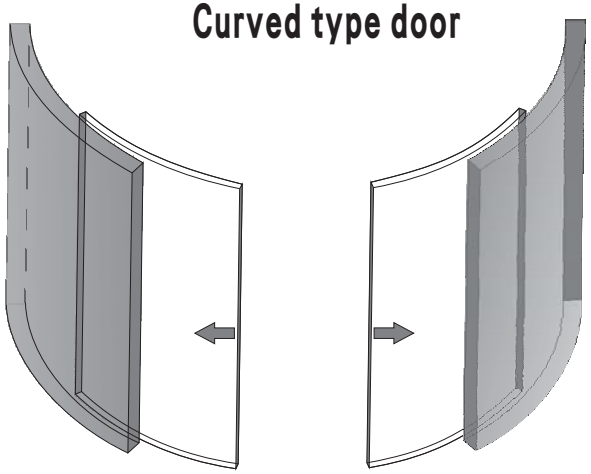

Installation: Please in accordance with the instruction of Curved Type Door.

TELESCOPIC SLIDING DOORS

Telescopic 4-winged Sliding Doors.

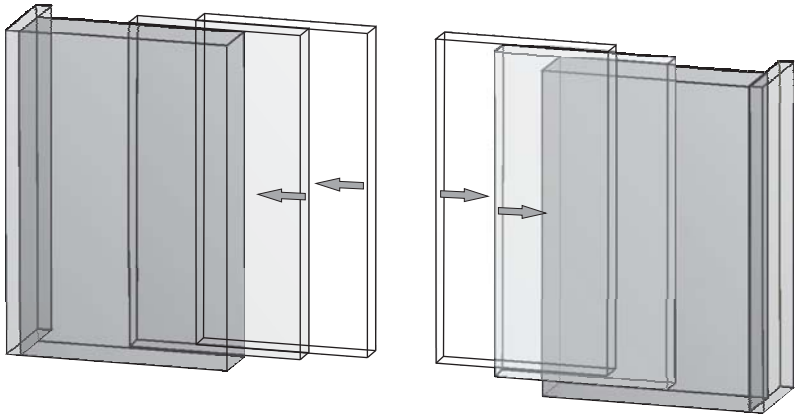

Installation: Please in accordance with the instruction of Telescopic 4-winged Sliding Doors.

Telescopic 2-winged Sliding Doors.

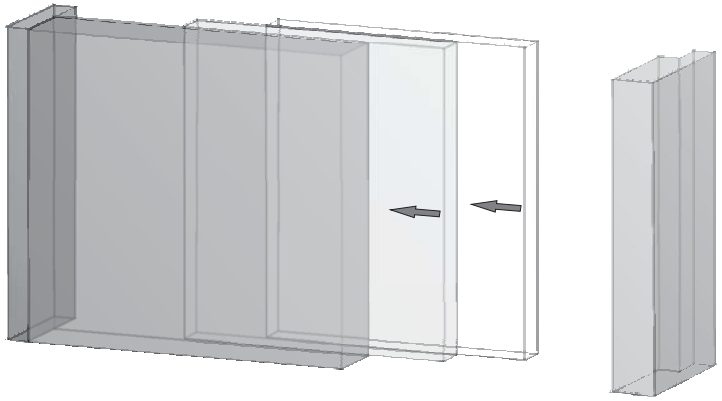

Installation: Please in accordance with the instruction of Telescopic 2-winged Sliding Doors.

TROUBLESHOOTING

The Door-Leaf sends out abnormal noise in operating.

Cause 1 The SCREW of the HANGING TWIN-WHEEL is loose.	Cause 2 HANGING TWIN-WHEEL is broken.	Cause 3 HANGING TWIN-WHEEL is dirty.
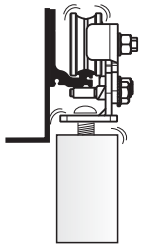	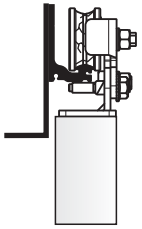	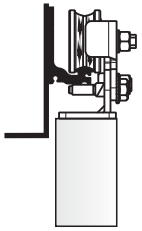
How to solve: Refasten the SCREW of HANGING TWIN-WHEEL.	How to solve: Replace a new one HANGING TWIN-WHEEL.	How to solve: Clean the HANGING TWIN-WHEEL.

Cause 4
ALUMINUM PROFILE is dirty.

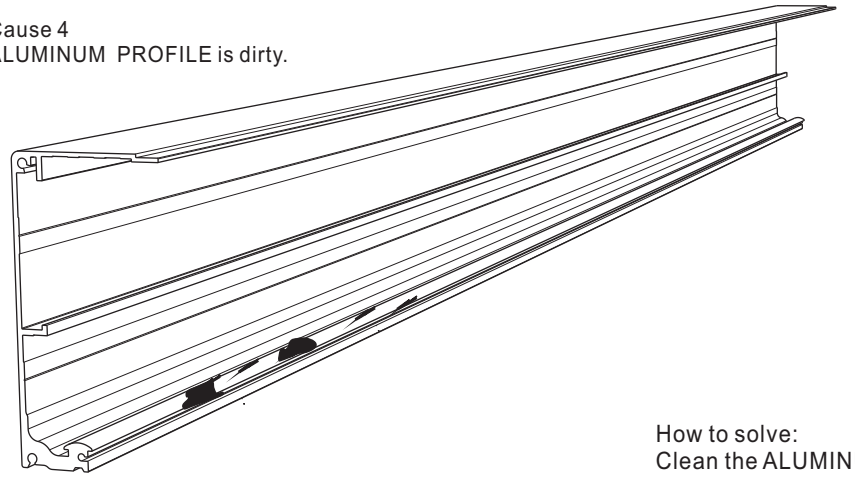

How to solve:
Clean the ALUMINUM PROFILE.

Door-Leaf isnt smooth in operating.

Cause 1
HANGING TWIN-WHEEL is not at vertical position.

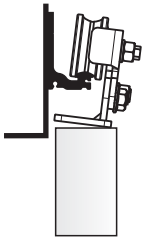

How to solve:
Readjust the HANGING TWIN-WHEEL.

Cause 2
1.Door touches Ground Rail.
2.Ground Rail is dirty.

How to solve:
1.Readjust the distance between Door and Ground Rail.
2.Clean up the Ground Rail.

Cause 3
ALUMINUM PROFILE is not vertical

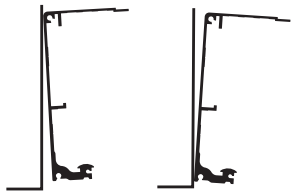

How to solve:
Readjust the vertical position of the ALUMINUM PROFILE.

Cause 4
ALUMINUM PROFILE is not at horizontal position.

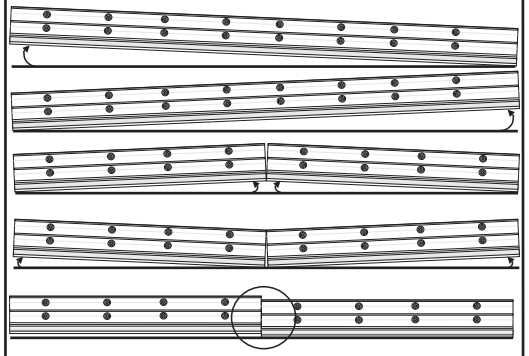

How to solve:
Readjust the level position of the ALUMINUM PROFILE.

Cause 5
SCREW of ALUMINUM PROFILE.

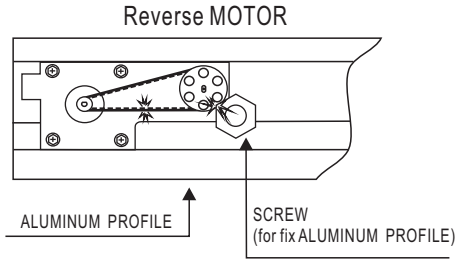

How to solve:
Unload the MOTOR, readjust the POSITION of SCREW.

COMPONENTS SPECIFICATION

MICRO-CONTROLLER

BRUSHLESS DC MOTOR

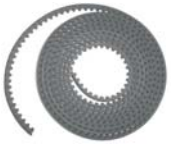

RACK BELT

SENSORS
(OPTIONAL DEVICE)

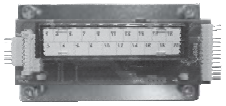

COMBINED
TERMINAL BLOCK
(OPTIONAL DEVICE)

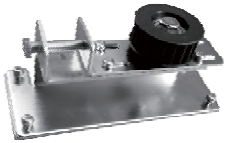

BELT ROLLER

(BI-PARTING)HANGERS & IRON PARTS

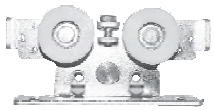

HANGING
TWIN-WHEEL4 PCS

BELT BRACE

PASSIVE BRACE
with BELT FIXER

ACTIVE BRACE
with BELT FIXER

HANGING
BRACE-4 PCS

IRON PARTS SACK

STOPER-2 PCS

WIRE CLAMP-5 PCS

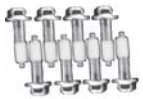

BLOCK SCREW-8 PCS

GROUND WHEEL
-2PCS
(OPTIONAL PART)

SCREW-8 PCS

DOOR SCREW-8 PCS

TROUBLESHOOTING

Door cant be opened or closed.

Cause 1 Above the Door-Leaf touched with the crossbeam. 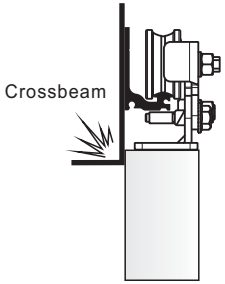 How to solve: Adjustment the interval between the Door-Leaf height and Crossbeam.	Cause 2 The Door-Leaf touched with the Ground Guide Rail.  How to solve: Adjus the Door-Leaf height.	Cause 3 Door-Leaf derails the ALUMINUM PROFILE. 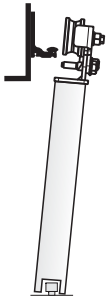 How to solve: Put the Door-Leaf into the ALUMINUM PROFILE again.
Cause 4 Door-leaf does not horizontal. 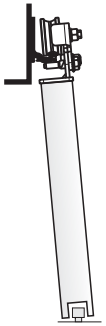 How to solve: Adjust the Ground Guide Rail/Wheel position.	Cause 5 SENSOR is broken or disconnects to the MICRO-CONTROLLER. 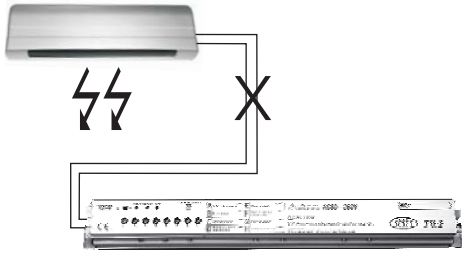 How to solve: 1.If SENSOR is broken please change a new one. 2.Check SENSOR whether it connects to the MICRO-CONTROLLER.	

TROUBLESHOOTING

PROBLEMS	REASONABLE	CHECK	HOW TO SOLVE
DOOR CAN'T BE MOVED.	1.No power.	Broken circuit.	Check the broken circuit position.
		The Power Switch is not opened.	Open the POWER SWITCH.
	2.The door is locked.	Door is locked and no movement action.	Open the DOOR LOCK.
	3.The sensor is broken.	Signal light is WORKING.	Check the MICRO-CONTROLLER.
		Signal light is OUT OF WORKING.	Check the CIRCUIT OF SENSOR or change a new one SENSOR.
SPEED	1.Speed is too slow.	Check the Speed at KNOB of MICRO-CONTROLLER.	Adjust the Speed of Open/Closed Door.
	2.Door runs into the obstructor, then cause the Door moving slow.	Installation problem or dirty.	Reinstall or clean the ALUMINUM PROFILE.
	3.Door is difficult to move.	Turn off the power.Use hand to move the Door, besides, check the Ground Guide Rail whether it is dirty.	Clean the Ground Guide Rail.
		Check the HANGING TWIN-WHEEL whether it is broken.	Change a new one.
		Check the Door Bolt in the door bottom whether it is loosen.	Fix the Door Bolt.
		Check whether the Ground Wheel is broken.	Change a new Ground wheel.
DOOR CAN'T FULL OPEN.	In the Half-Open way.	Check the Knob/Switch.	Turn on to Full Open.
DOOR CAN'T CLOSE.	1.In the Full-Open way.	The SENSOR keeps working.	Check wiring or change a new SENSOR.
	2.The Door opens suddenly while it is moving to close .	The SENSOR probably is installed with something wrong.	Adjust the SENSOR or change a new one.

TECHNICAL SPECIFICATION

TYPE	TH-3	
MODEL	SINGLE-WINGED	BI-PARTING
DOOR WEIGHT	150kg X1(door)	130kg X2(door)
DOOR WIDTH	DW=500mm~2500mm	DW=500mm~2500mm
INSTALL WAY	Surface install	Surface install
MOTOR	DC24V 75W BRUSHLESS DC MOTOR	
CONTROL	STANDARD MICRO-CONTROLLER	
POWER CONSUMPTION	75W	
VOLTAGE	AC100V~240V	
ENVIRONMENTAL TEMPERATURE	-20℃~+50℃	
VOLUME	60decibel(max.)	
STARTING SPEED	600mm(second)	550mm X 2(second)
STARTING TIMES	0~20 sec. (regulable)	
TRANSMISSION IMPORTANT CONDITION	RACK BELT S8M	
OPENING DOOR RANGE	FULL/HALF-OPEN (regulable)	
PFC POWER EFFICIENCY	0.95(in AC100V Full load)	
TRACTION FORCE	3 kg	

3 SECTIONAL DRAWING

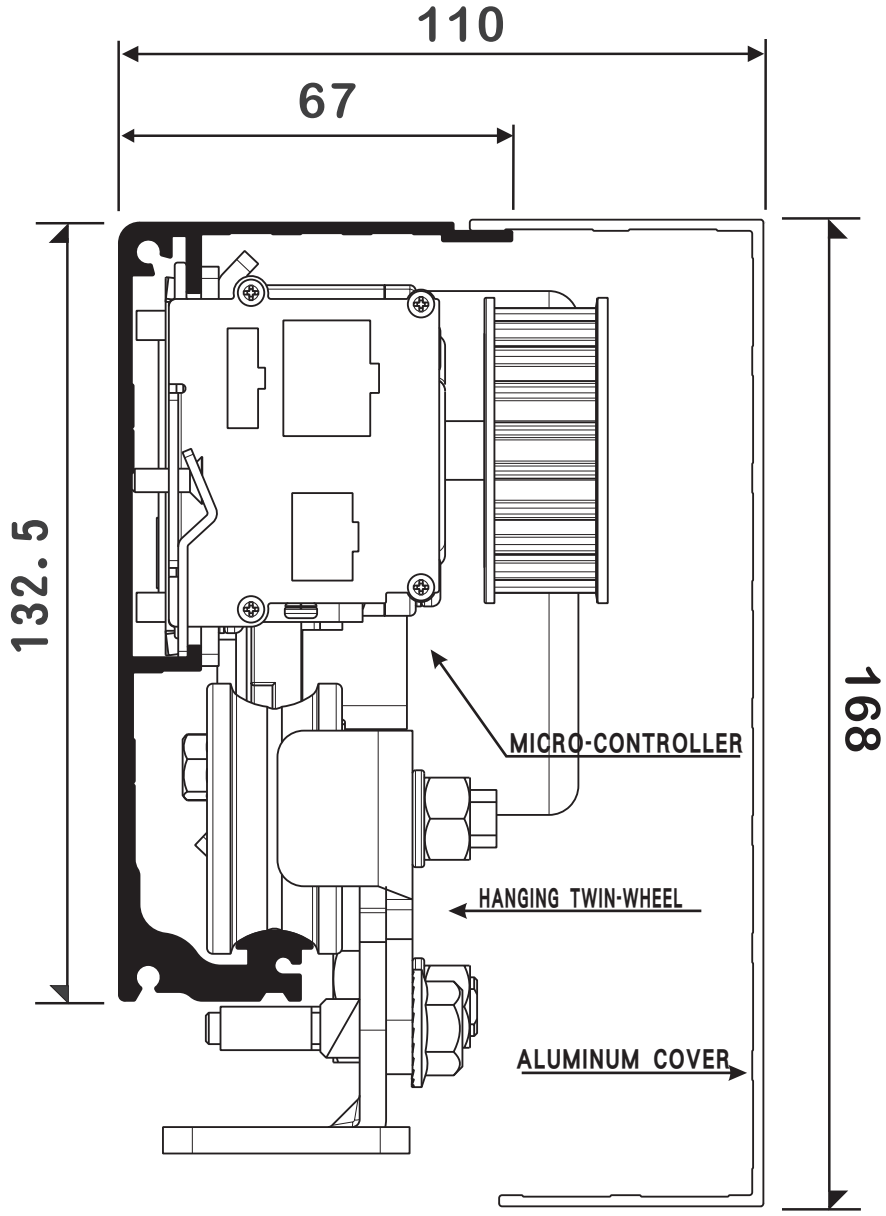

MEASURE : mm

14 BROKEN CHECKING

1. Turn off power.
2. Use your hand to move the Door-Leaf.

Preliminary analysis

Running isn't Smooth →

1. Check the distance between Door and Wall / Crossbeam.
2. HANGING TWIN-WHEEL is broken.
3. The GROUND RAIL is dirty.
4. The Door-Leaf becomes deformed.
5. Check BLOCK SCREW whether need to adjust.
6. The GROUND GUIDE WHEEL is damaged.
7. Check the LOCK whether it is broken.
8. Check the ALUMINUM COVER whether it isn't fixed.
9. There is dirt inside the ALUMINUM PROFILE.

Running smooth

Check the circuit

1. Turn on power.
2. Take out the sensor signal line.
3. Test the circuit of SENSOR.

Running check

Running smooth →

The PROBLEM of the SENSOR

1. Check the SENSOR whether it is broken.
2. Check the SENSOR whether the wire is broken or short circuit.

Running isn't Smooth

The PROBLEM of the MOTOR

1. Wiring connects fault.
2. Spare parts of the MICRO-CONTROLLER broken.

E The closing speed of the door

Adjust the CLOSED SPEED
Higher number, faster speed.
CAUTION: please adjust the number one by one from low to high.

F The slowing range of closing door

Adjust the SLOW RANGE of CLOSED DOOR
Higher number, more range about the slow range at open door position.
CAUTION: please adjust the number one by one from high to low.

G The slowing speed of the door

Adjust the SLOW SPEED
Higher number, faster speed.
CAUTION: please adjust the number one by one from low to high.

H Opening hold time

Adjust the HOLD OPEN TIME
Higher number, the hold time is longer.

NUMBER	0	1	2	3	4	5	6	7	8	9
SECOND	0	1	2	3	4	5	6	10	15	20

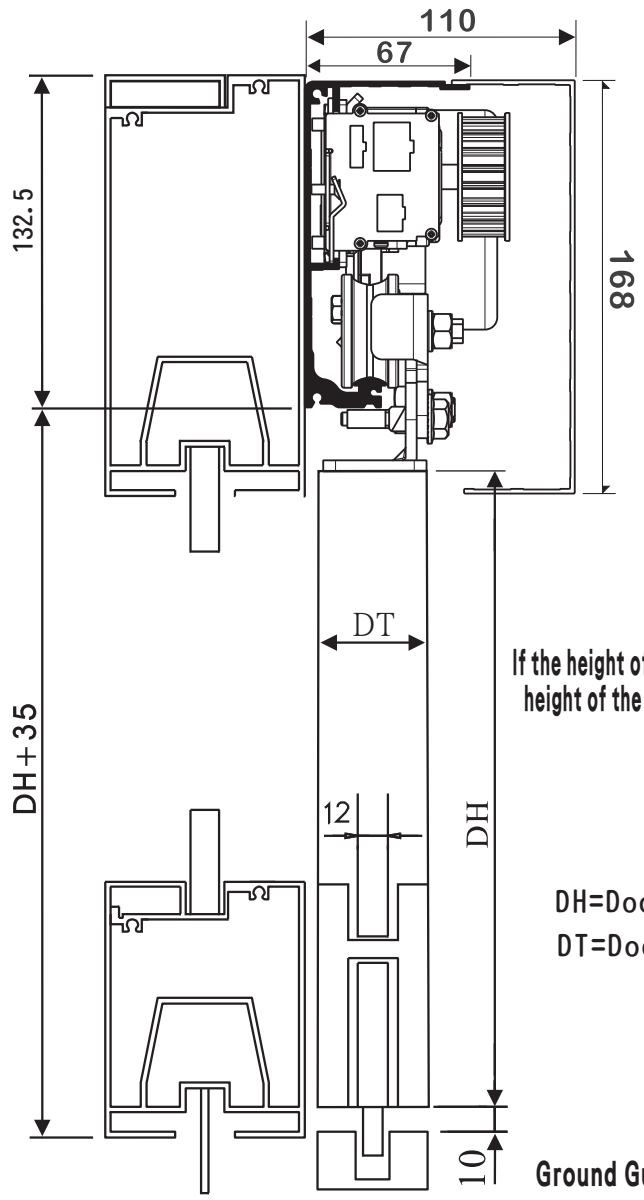

MEASURE : mm

If the height of the Door-Leaf is 2,300mm, then the total height of the ALUMINUM PROFILE is 2,335mm.

DH=Door height
DT=Door thickness

Ground Guide Rail(ditch)

INSTALL PROCEDURE

1 Prepare — Should correct the height and the leveling of the ALUMINUM PROFILE

2 Cut and install the ALUMINUM PROFILE

3 Install the SENSORS

4 MOTOR

5 MICRO-CONTROLLER

6 Install the BELT ROLLER

7 Hang and adjust the Door-Leaf

8 Install and adjust the BELT

9 Power connect

10 Test and adjust

ADJUSTMENT

A Full/Half opening

Adjust the RANGE of the HALF OPEN DISTANCE.
Higher number, wider range.

B Brake power

The Door-Leaf is slight, the BRAKE POWER is less.
Please choose 0~2 if the Door-Leaf is under 50kg.
Please adjust number from number 5 if the Door-Leaf is over 80kg.

C The opening speed of the door

Adjust the OPEN SPEED
Higher number, faster speed.
CAUTION: please adjust the number one by one from low to high.

D The slowing range of opening door

Adjust the SLOW RANGE of OPENING DOOR
Higher number, more range about the slow range at open door position.
CAUTION: please adjust the number one by one from high to low.

Before turn on the power, make sure the Door-Leaf can be smoothly moved, and the electric link is correct at first.

1.SYSTEM PROGRAM REMEMBER

After turn on the power, the MICRO-CONTROLLER will remember the distance and the range.

2.ADJUST

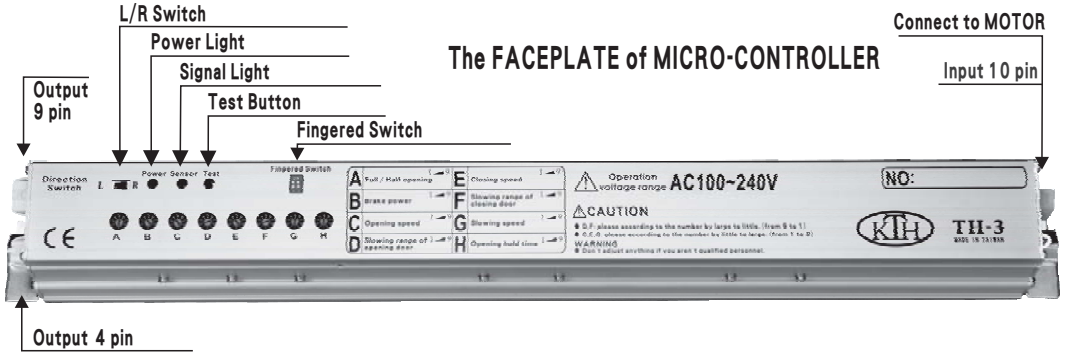

Red LED-Power is connected.

Green LED-Input the open door signal.

L/R switch-The direction of the door opening: right/left(R/L).

Fingered Switch- Pin 1- Directional Function

Operation
- OFF: Normal mode.
- ON: push once , open the door. Push again,close the door.

Fingered Switch- Pin 2- Reverse Switch: in order to control opening and closing direction of the Door -Leaf after power resumes.

Operation
- OFF: Normal mode, after power resumes, the Door-Leaf opens the door first.
- ON: suitable for Security System, after power resumes, the Door-Leaf closes the door first.

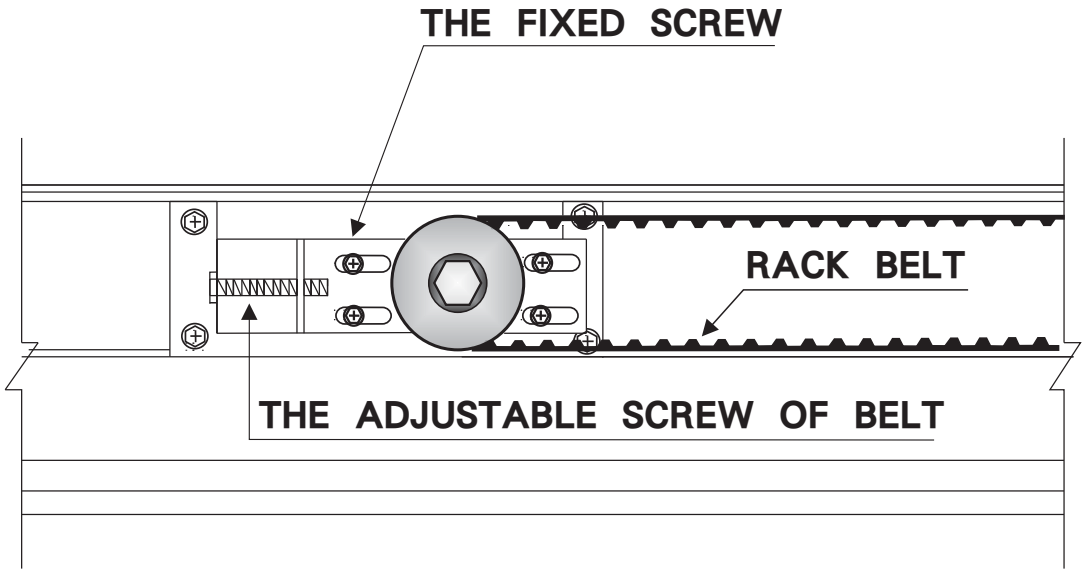

TENSION of BELT can be adjusted by the ADJUSTABLE SCREW of BELT, after that, must tighten the FIXED SCREW of BELT.

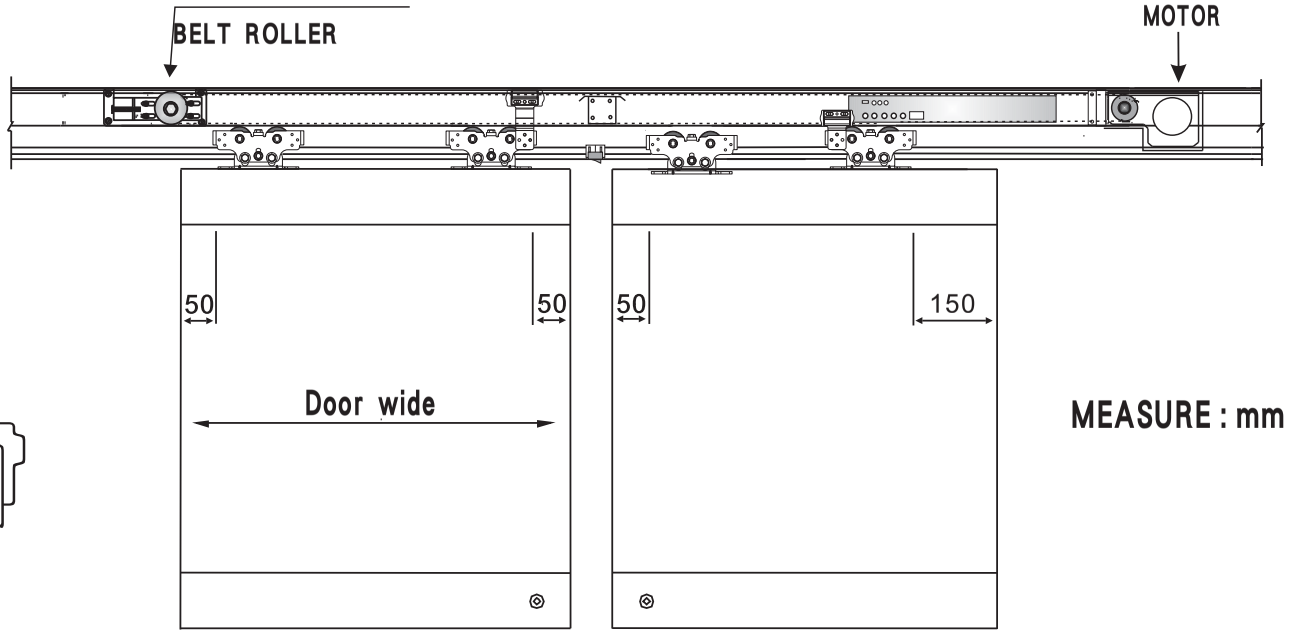

Inside the room, the distance between the "right side hanging-wheel" and "the edge of door" must be more than 150mm.

Wiring diagram (Optional Device)

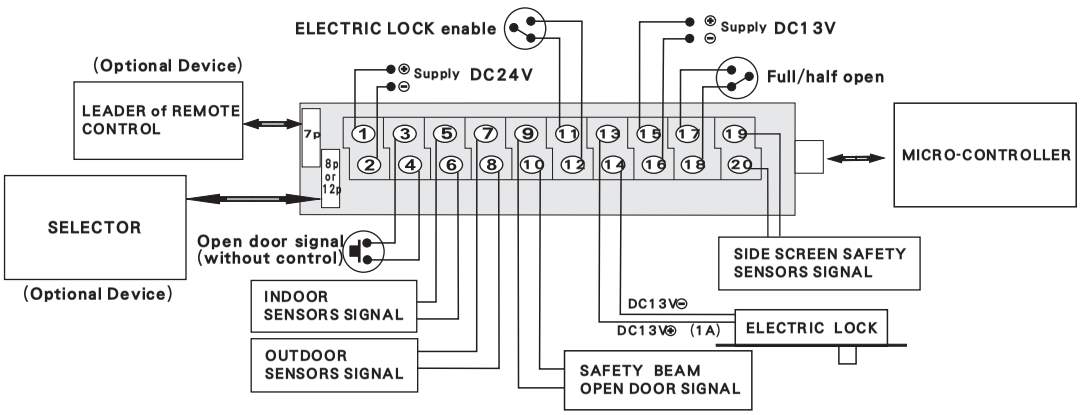

(A) The FUNCTION of the ELECTRIC LOCK will work when ⑪ and ⑫ are short circuit, then ⑬ and ⑭ will output DC13V for ELECTRIC LOCK after the door closes. ⑬ and ⑭ will not output DC13V if ⑪ and ⑫ are not short circuit.

(B) The SIGNAL of the SAFETY BEAM is controlled by ⑨ and ⑩. When door is opening and running, ⑨ and ⑩ keep to accept the signal, then the SAFETY BEAM will be working. ⑨ and ⑩ will not work when the door is closed, then the SAFETY BEAM will lose efficacy when the door is closed.

(C) Please according with the connection way if it was installed"Selector", "Remote","Sensors of inside and outside" at the same time; The entrance guard is under controlled by "Selector", furthermore, please extra contact ③ and ④ for the open door signal of "without control". eg. Extra install a BUTTON or CARD READER....

(D) The signal of Side Screen Safety Sensor is controlled by ⑲ and ⑳. Side Screen Safety Sensors are placed at the rear end of the door to prevent collisions during the opening movement of the moving leaves. When the signal activates, the moving leaves will become slowly, till the door opens fully, then close normally.

Output connect

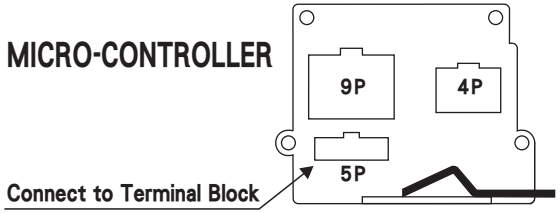

9P terminal

Black	Red	Orange
Yellow	Green	Blue
Purple	Gray	

Red DC13V⊕
Black GND ⊖
— Output DC13V 1A for ELECTRIC LOCK use

Blue
Green
— Output NC signal

Orange
Yellow
— ELECTRIC LOCK enable

Gray
Purple
— Full/Half opening signal

4P terminal

Black	Red
Orange	Orange

Red DC24V⊕
Black GND ⊖
— Power of SENSOR

Orange
Orange
— The signal of SENSOR

PS : 5P terminal is required using with Combined Terminal Block.

The illustration of the ELECTRIC LOCK contact

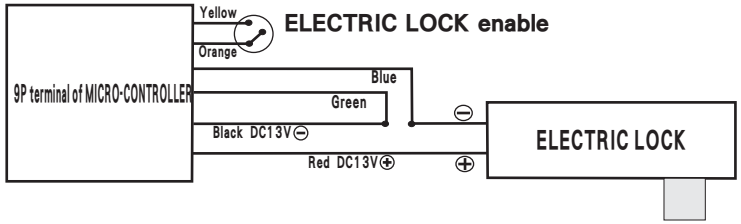

PS : After the orange and the yellow lines are short circuit, the blue and the green lines would output NC signal.

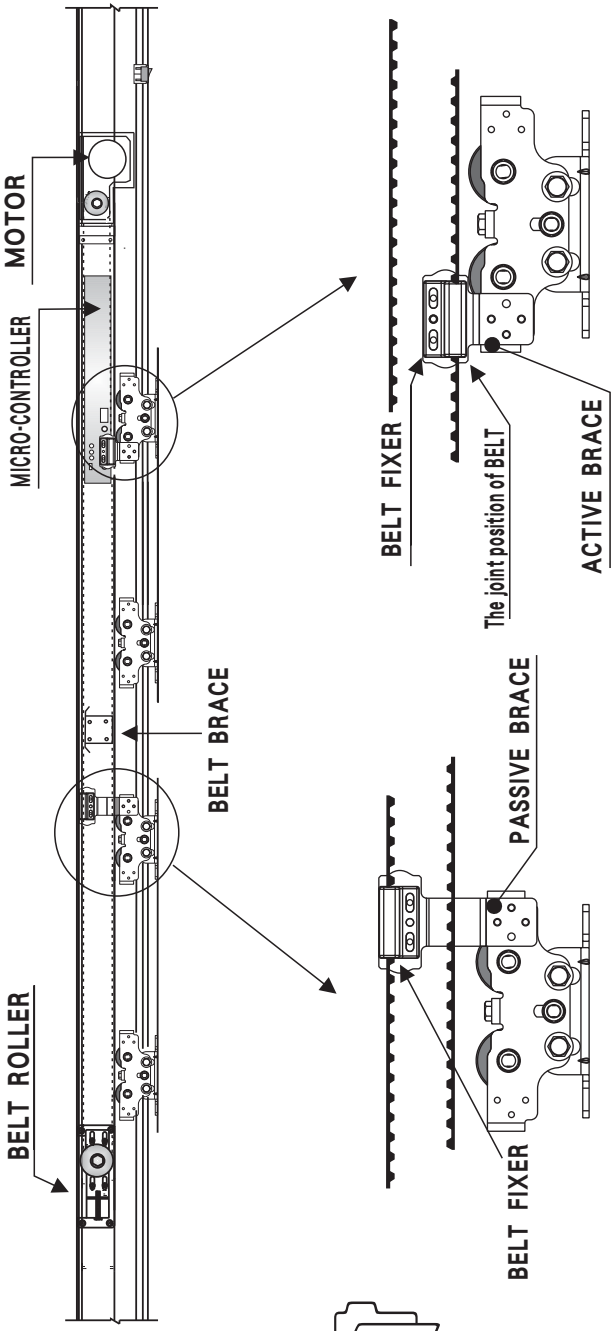

ADJUST THE DOOR-LEAF

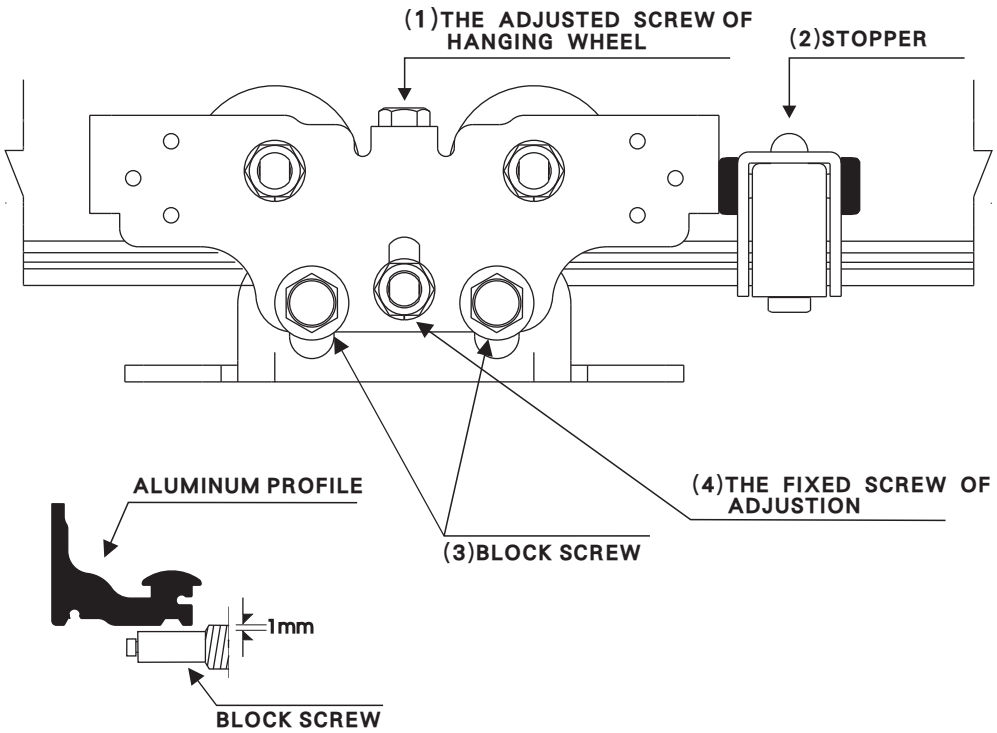

Ⓐ When Door-Leaf height and interval need to adjust, loose (3) & (4) at first, then adjust (1).

Ⓑ Need to fasten (3) & (4)after adjust Ⓐ .

Ⓒ Install above-mentioned (2) after make sure the DOOR OPEN POSITION.

CONNECTION (MOTOR)

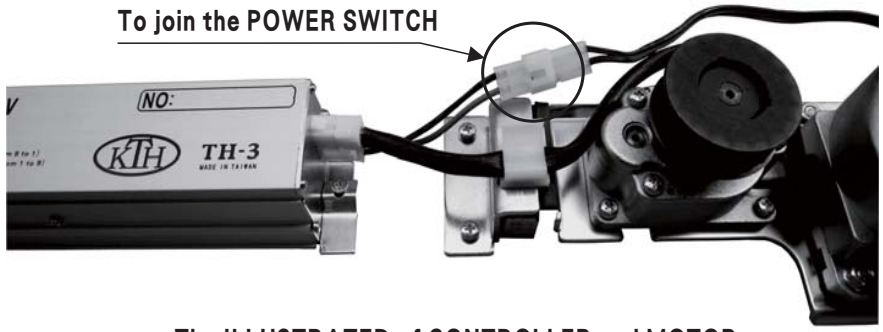

The ILLUSTRATED of CONTROLLER and MOTOR.

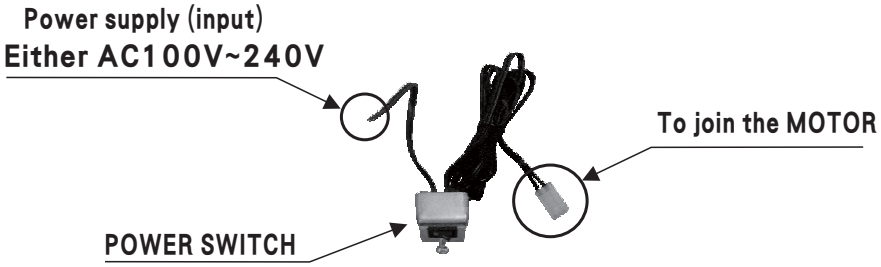

Warning

Please confirm WHETHER the SENSOR VOLTAGE is the same as the power supply. If different between them, need to add the TRANSFORMER, otherwise the SENSOR would be burned.